Lens Data

LENS	STAR3851
Cover	light / heavy frosted
Lens Material	LN-2250
Lens Dimension	Φ41.43*9.4
Status	Production
Date updated/Version	2014/11/06 v1

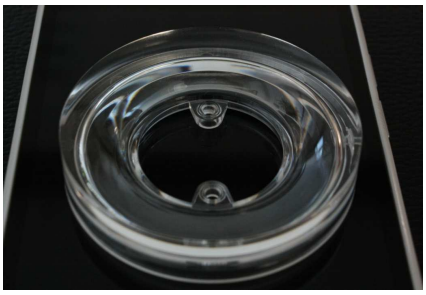

Mechanical Drawing

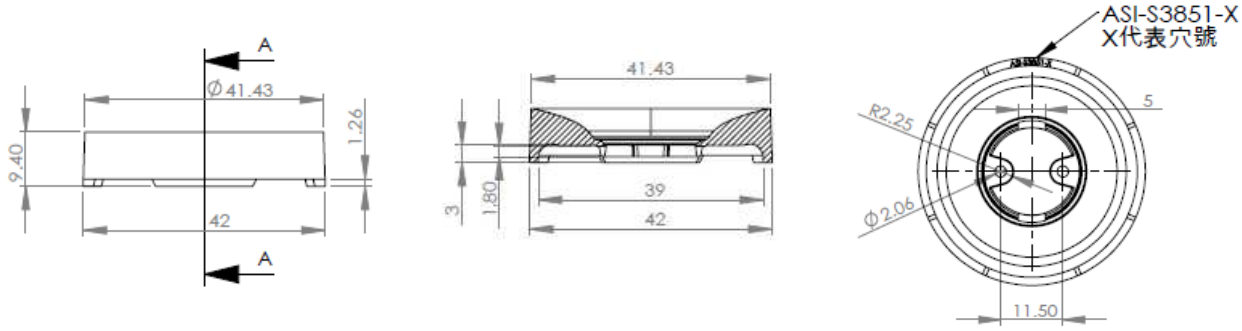

Performance Specification

LENS	STAR3851
LED	Nichia 757*18
Cover	Light frosted
Beam Angel	280°
Lens Efficiency	88%
Voltage(V)/Current(mA)	DC 50V/100mA

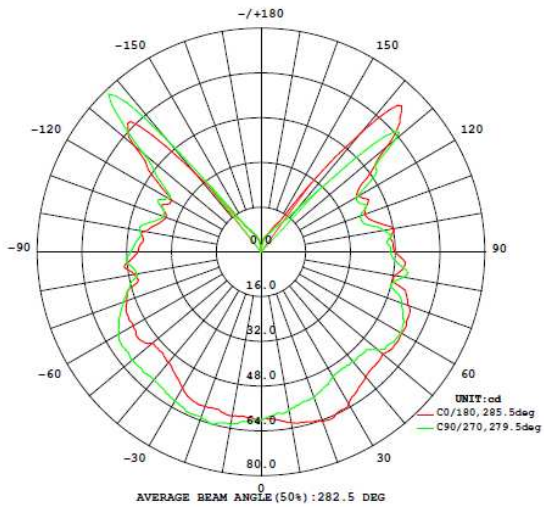

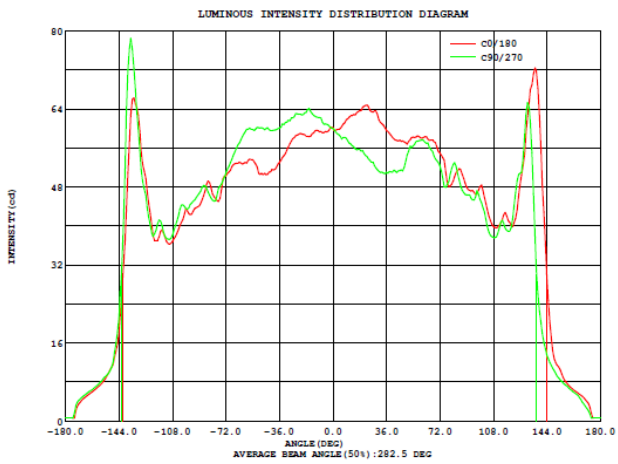

Copyright @辰峯光電股份有限公司 Aether Systems Inc. All rights reserved. The information in this document is subject to change without notice http://www.aether-systems.com/ +886 2 27908187

LENS	STAR3851
LED	Nichia 757*18
Cover	heavy frosted
Beam Angel	280°
Lens Efficiency	88%
Voltage(V)/Current(mA)	DC 50V/100mA

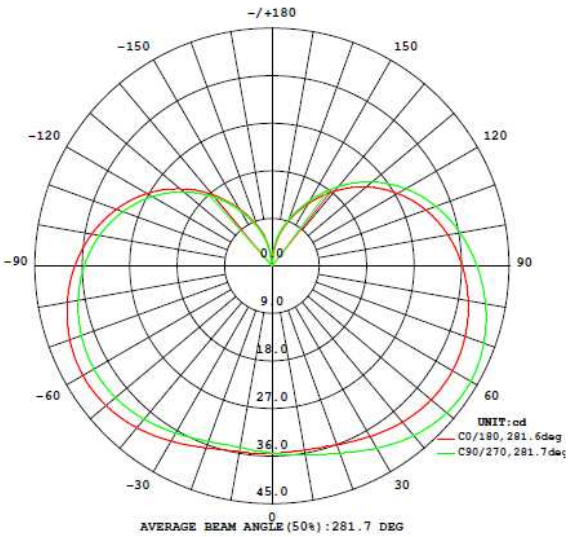

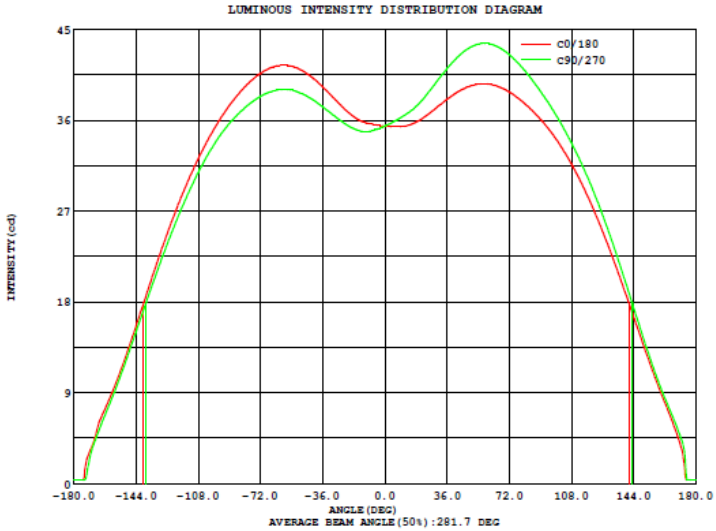

Copyright @辰峯光電股份有限公司 Aether Systems Inc. All rights reserved. The information in this document is subject to change without notice http://www.aether-systems.com/ +886 2 27908187