Data Sheet
CAP0732

Lens Data

LENS	CAP0732
Compatible Holder	N.A
Lens Material	L1225 Z100
Lens Dimension	Φ70*16.7
Status	Production
Date updated/Version	2015/06/15 v1

Mechanical Drawing

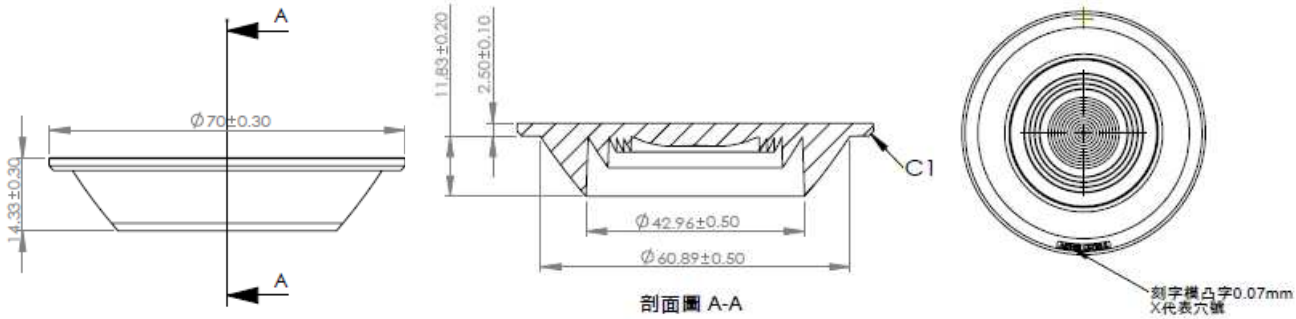

Performance Specification

LENS	CAP0732
LED	3030*16
Beam Angle	25° ±3
Efficiency	83.2%
Cd/Lamp Lm	3.1
Voltage(V)/Current(mA)	25V/470mA

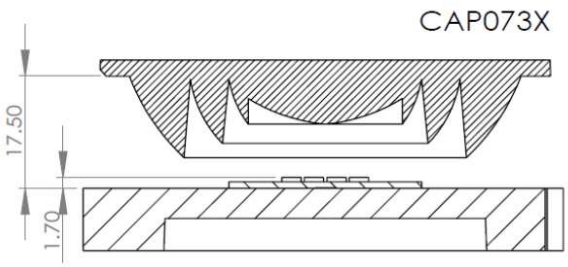

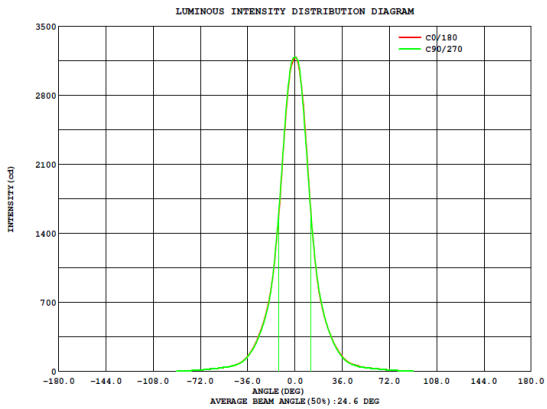

Copyright @辰峯光電股份有限公司 Aether Systems Inc. All rights reserved. The information in this document is subject to change without notice http://www.aether-systems.com/ +886 2 27908187

Performance Specification

LENS	CAP0732
LED	Citizen LES9.8
Beam Angle	15° ±3
Efficiency	86.8%
Cd/Lamp Lm	5.54
Voltage(V)/Current(mA)	38V/360mA

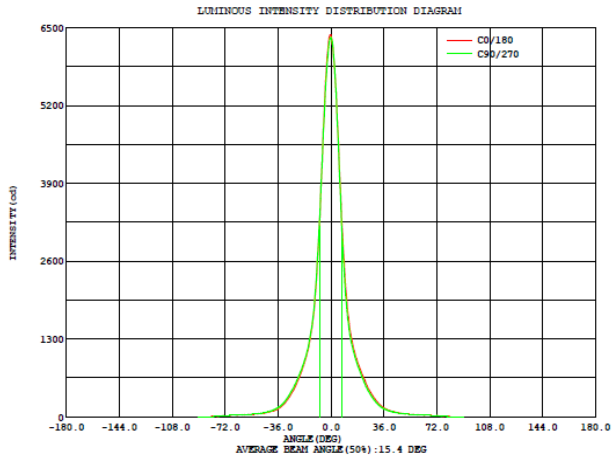

LENS	CAP0732
LED	Citizen LES14.5
Beam Angle	24° ±3
Efficiency	85.2%
Cd/Lamp Lm	3.69
Voltage(V)/Current(mA)	33V/300mA

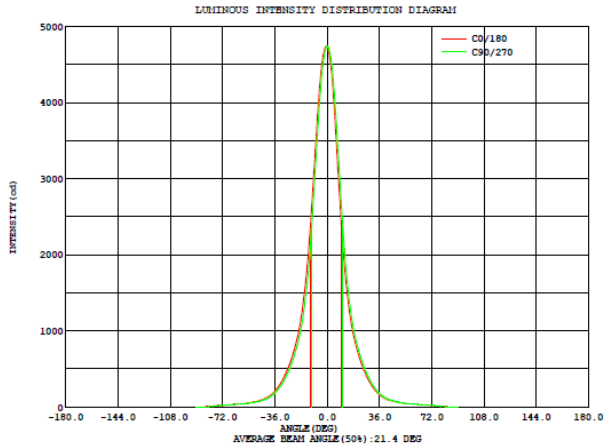

Copyright @辰峯光電股份有限公司 Aether Systems Inc. All rights reserved. The information in this document is subject to change without notice http://www.aether-systems.com/ +886 2 27908187